MSP-EXPCC430RFx Experimenter Kit

ECCN 5A002A1A

User's Guide

Literature Number: SLAU460
January 2013

Contents

1 MSP-EXPCC430RFx Experimenter Kit Overview 4
- 1.1 Overview 4
- 1.2 Kit Contents 8

2 Getting Started With the MSP-EXPCC430RFx Experimenter Kit 8
- 2.1 Hardware Preparation 8
- 2.2 Software Preparation 9
- 2.3 MSP-EXPCC430RFx User Experience 10
- 2.4 MSP-EXPCC430RFx Firmware Applications 10
- 2.5 CC430 Wireless Network GUI 11

3 MSP-EXPCC430RFx Experimenter Kit Hardware 12
- 3.1 MSP-EXP430F6137Rx Hardware Description 12
- 3.2 MSP-EXP430F5137Rx Hardware Description 13
- 3.3 Schematics 13
- 3.4 PCB Layout 17

4 MSP-EXPCC430RFx Experimenter Kit Firmware 19
- 4.1 Import Project in Code Composer Studio™ 19
- 4.2 Open Project in IAR Embedded Workbench™ 19
- 4.3 SimpliciTI™ RF Protocol 19
- 4.4 SimpliciTI Configuration for the MSP-EXPCC430RFx User Experience 19
- 4.5 5xx/6xx Core Libraries 20

5 MSP-EXPCC430RFx Experimenter Kit Software 20
- 5.1 Requirements 20

6 References 20

7 Bills of Materials (BOM) 21

Copyright © 2013, Texas Instruments Incorporated

List of Figures

1 MSP-EXPCC430RFx Experimenter Kit – MSP-EXP430F6137Rx Base Board (Front) 5
2 MSP-EXPCC430RFx Experimenter Kit – MSP-EXP430F6137Rx Base Board (Back) 6
3 MSP-EXPCC430RFx Experimenter Kit – MSP-EXP430F5137Rx Satellite Board (Front) 7
4 MSP-EXPCC430RFx Experimenter Kit – MSP-EXP430F5137Rx Satellite Board (Back) 7
5 MSP-EXP430F6137Rx Base Board Hardware 12
6 MSP-EXP430F5137Rx Satellite Board Hardware 13
7 MSP-EXP430F6137Rx Base Board Schematic – Page 1 13
8 MSP-EXP430F6137Rx Base Board Schematic – Page 2 14
9 MSP-EXP430F6137Rx Base Board Schematic – Page 3 15
10 MSP-EXP430F5137Rx Satellite Board Schematic 16
11 MSP-EXP430F6137Rx Base Board Layout 17
12 MSP-EXP430F5137Rx Satellite Board Layout 18

List of Tables

1 MSP-EXP430F6137R9 Base Board (HW-V2.1) BOM 21
2 MSP-EXP430F5137R9T Satellite Board (HW-V2.0) BOM 25
3 MSP-EXP430F6137R4 Base Board (HW-V2.1) BOM 26
4 MSP-EXP430F5137R4T Satellite Board (HW-V2.0) BOM 30

Copyright © 2013, Texas Instruments Incorporated

User's Guide
SLAU460–January 2013

MSP-EXPCC430RFx Experimenter Kit User's Guide

1 MSP-EXPCC430RFx Experimenter Kit Overview

1.1 Overview

The MSP-EXPCC430RFx Experimenter Kit is the complete sub-GHz development platform for the CC430 devices from the MSP430™ family. The kit provides two sub-GHz wireless modules: the MSP-EXP430F6137Rx Base Board with the CC430F6137, and the MSP-EXP430F5137Rx Satellite Board with the CC430F5137. Out of the box, the two modules enable demonstration of a SimpliciTI™ wireless sensor network and take full advantage of a highly-integrated LCD and PC connection. Additionally, the kit also enables a complete development and prototyping environment to design a wireless application.

NOTE: The term MSP-EXP430F6137Rx throughout this user's guide refers to the full different frequency derivatives of the product as follows:

- MSP-EXP430F6137R4 for 433 MHz
- MSP-EXP430F6137R9 for 868 MHz and 915 MHz

The term MSP-EXP430F5137Rx throughout this user's guide refers to the full different frequency derivatives of the product as follows:

- MSP-EXP430F5137R4T for 433 MHz
- MSP-EXP430F5137R9T for 868 MHz 915 MHz

The MSP-EXPCC430RFx kits are available from the TI estore:

MSP-EXPCC430RF4 - CC430 Sub-GHz RF Experimenter's Board for 433 MHz
MSP-EXPCC430RF9 - CC430 Sub-GHz RF Experimenter's Board for 868 and 915 MHz

MSP430, SimpliciTI, Code Composer Studio are trademarks of Texas Instruments.
All other trademarks are the property of their respective owners.

Copyright © 2013, Texas Instruments Incorporated

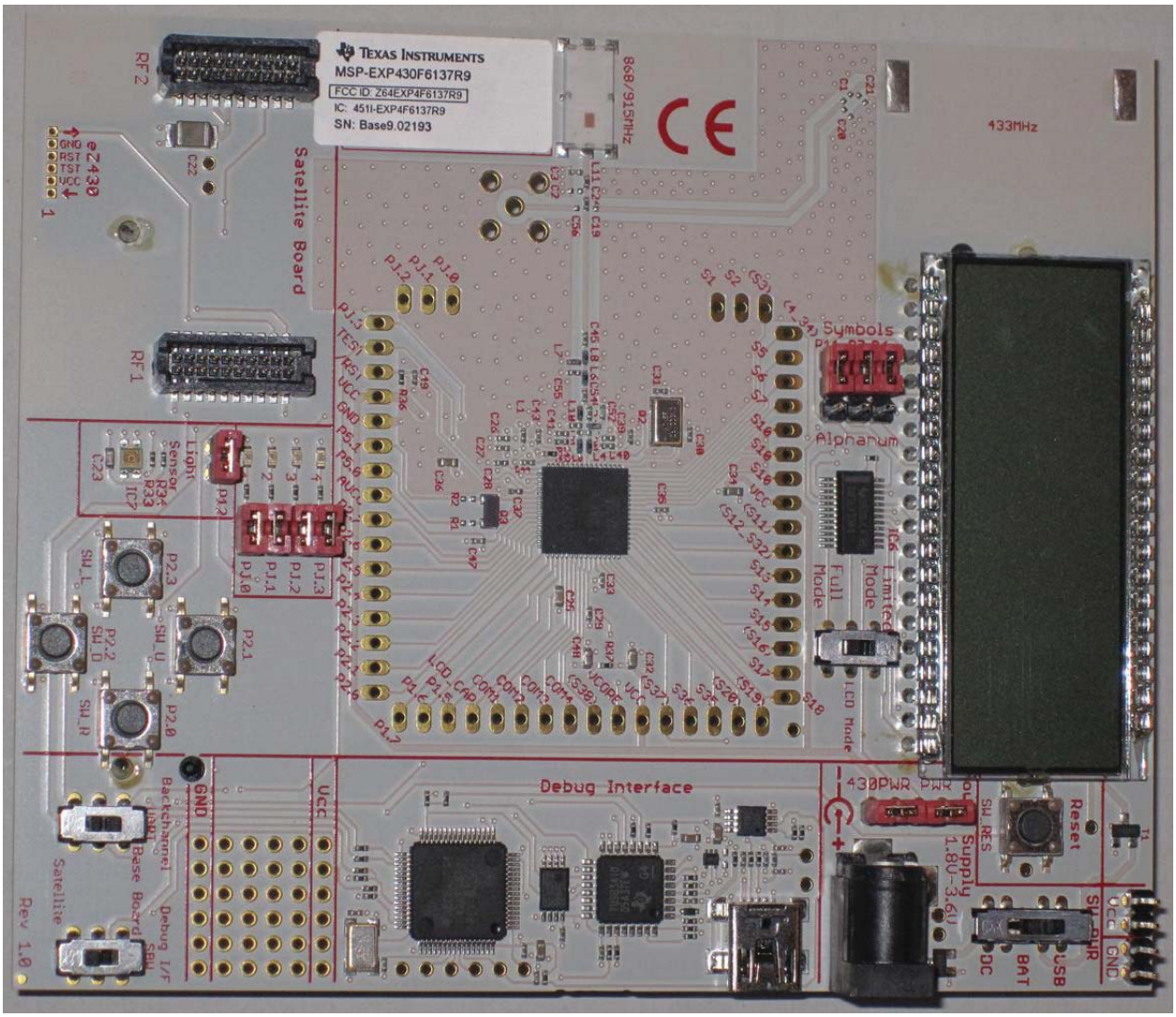

Figure 1. MSP-EXPCC430RFx Experimenter Kit – MSP-EXP430F6137Rx Base Board (Front)

Copyright © 2013, Texas Instruments Incorporated

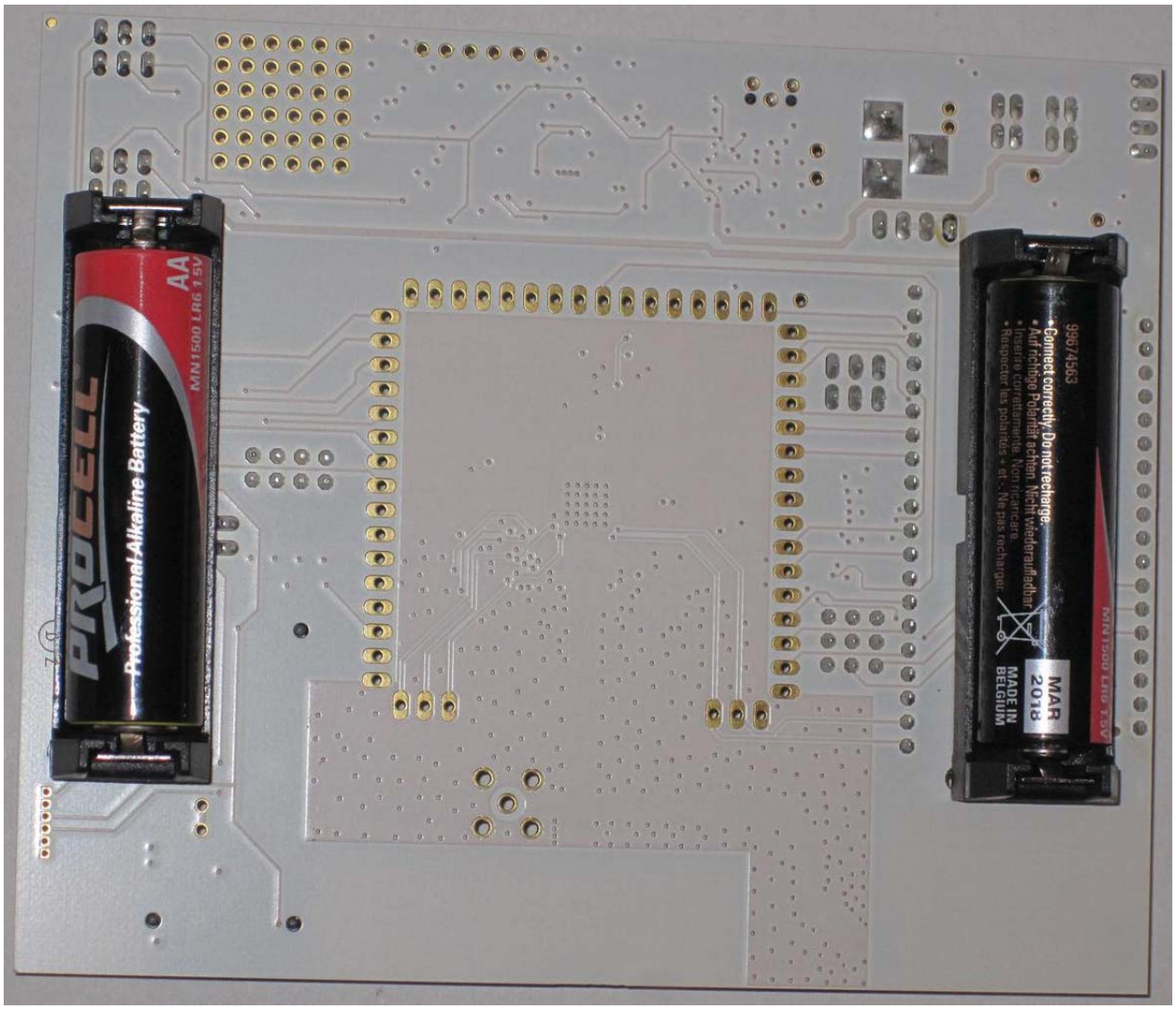

Figure 2. MSP-EXPCC430RFx Experimenter Kit – MSP-EXP430F6137Rx Base Board (Back)

Copyright © 2013, Texas Instruments Incorporated

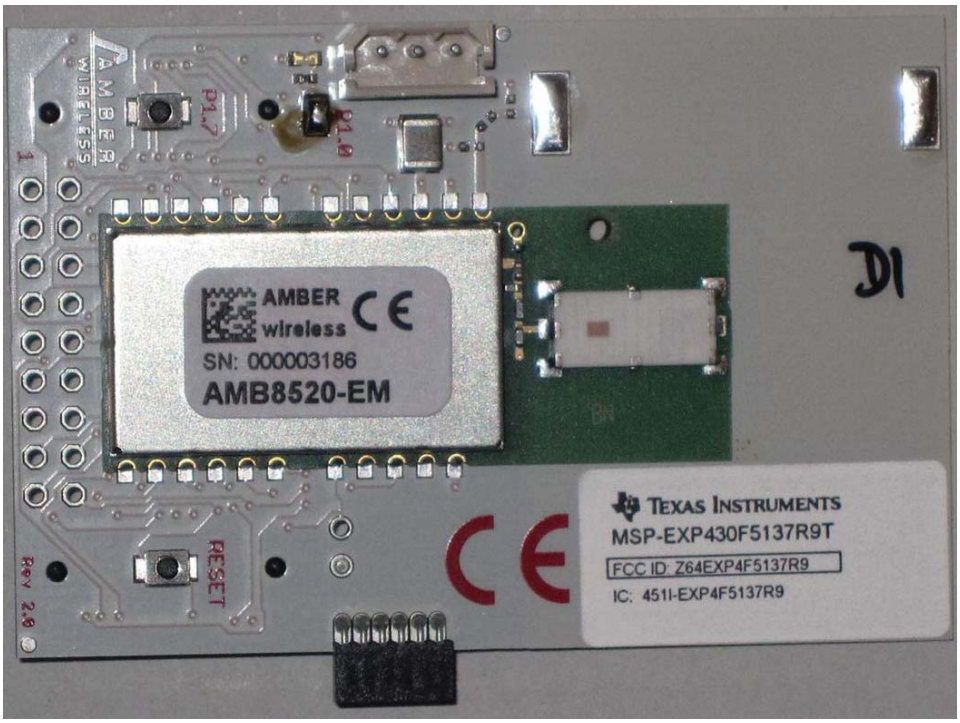

Figure 3. MSP-EXPCC430RFx Experimenter Kit – MSP-EXP430F5137Rx Satellite Board (Front)

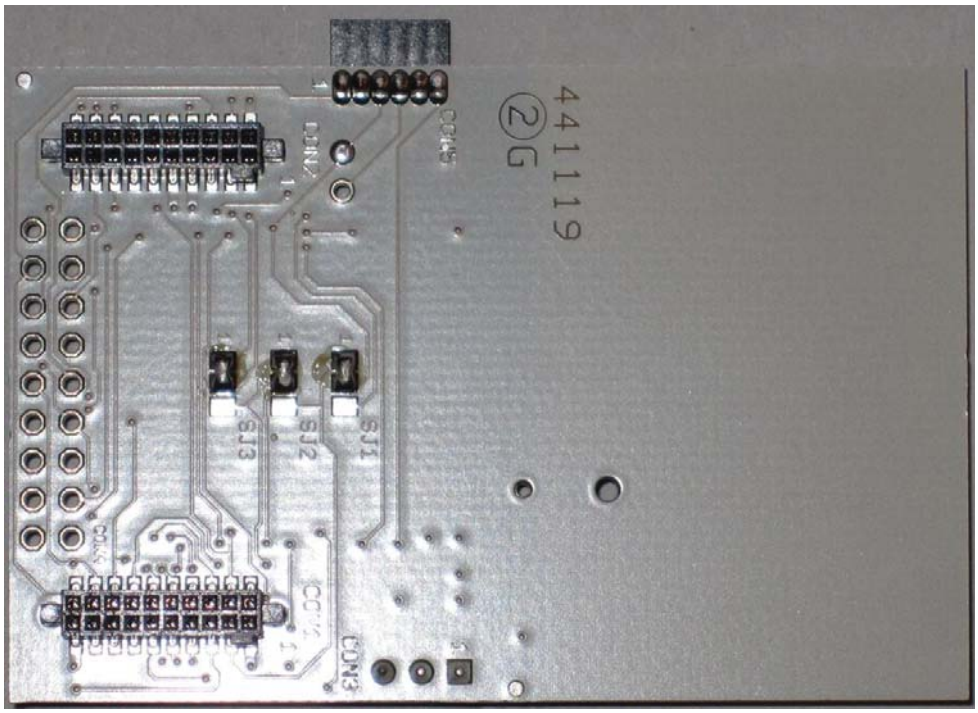

Figure 4. MSP-EXPCC430RFx Experimenter Kit – MSP-EXP430F5137Rx Satellite Board (Back)

The MSP-EXPCC430RFx Experimenter Kit features the RF System-on-Chip CC430 devices, CC430F6137 with LCD driver and CC430F5137. This combination of devices enables sub-GHz RF communication on the ultra-low-power MCU platform. The CC430 devices allow for high-performance radio with high sensitivity and excellent blocking, while minimizing the number of external components by integrating the solution into a single-chip MCU platform.

Copyright © 2013, Texas Instruments Incorporated

1.2 Kit Contents

The MSP-EXPCC430RFx Experimenter Kit includes two components:

- One MSP-EXP430F6137Rx Based Board with CC430F6137, RF front end with sub-GHz chip antenna and options for wire antenna and SMA connector, 96-segment alphanumeric LCD, on-board integrated debugging and programming emulator, four push buttons, four LEDs, and a light sensor.
- One MSP-EXP430F5137Rx Satellite Board with CC430F5137, RF front end with sub-GHz chip antenna, one push button, and one LED.

The CC430 devices feature an ultralow-power 16-bit microcontroller with an integrated radio core, an optional 96-segment LCD controller, 12-bit ADC, comparator, universal serial interface (supports UART, SPI and I2C), 32KB flash memory, and 4KB RAM memory.

2 Getting Started With the MSP-EXPCC430RFx Experimenter Kit

The following sections describe the preparation necessary to run the user experience application demo and to start developing applications with the MSP-EXPCC430RFx Experimenter Kit

2.1 Hardware Preparation

The MSP-EXPCC430RF9 (868 MHz or 915 MHz) version of the kit is preprogrammed with firmware operating at the 868-MHz frequency band. To comply with local regulations, ensure that the 915-MHz version of the firmware images are programmed onto both the MSP-EXP430F6137 Base Board and the MSP-EXP430F5137 Satellite Board before using the kits in North America (USA or Canada). Programming of the firmware can be done using the firmware loader or the IAR or CCS software projects included in the MSP-EXPCC430RFx User Experience Software Package (MSP-EXPCC430RFx Software Download).

2.1.1 Program the MSP-EXP430F6137Rx Base Board

1. Set the "Debug (SBW)" switch and the "UART" switch to the "Base Board" position.
2. Set the"SW PWR" (power selector) switch to the "USB" position.
3. Connect the USB cord from the PC to the MSP-EXP430F6137Rx.
4. On the PC, browse to the folder that contains the firmware:
   C:\ti\msp430\MSP-EXPCC430_UE_1_00_00_01\bin\firmware
5. Double click on the appropriate .bat file for the version of the firmware that is required (433, 868, or 915 MHz). The MSP430 Flasher tool programs the device with this firmware.

2.1.2 Program the MSP-EXP430F5137Rx Satellite Board

1. Make sure that the MSP-EXP430F5137Rx Satellite Board is connected to the Base Board.
2. Set the "Debug (SBW)" switch and the "UART" switch to the "Satellite" position.
3. Set the"SW PWR" (power selector) switch to the "USB" position.
4. Connect the USB cord from the PC to the MSP-EXP430F6137Rx.
5. On the PC, browse to the folder that contains the firmware:
   C:\ti\msp430\MSP-EXPCC430_UE_1_00_00_01\bin\firmware
6. Double click on the appropriate .bat file for the version of the firmware that is required (433, 868, or 915 MHz). The MSP430 Flasher tool programs the device with this firmware.

Copyright © 2013, Texas Instruments Incorporated

2.1.3 Prepare the MSP-EXPCC430RFx Experimenter Kit for Operation

2.1.3.1 Base Board MSP-EXP430F6137Rx

1. Select the power switch configuration to match the power supply in use (an external DC power supply, batteries, or the USB connector).
2. If the batteries option is selected, insert the two AA batteries provided with the kit into the sockets on the back on the MSP-EXP430F6137Rx base board. Observe the correct polarity (see the markings inside the battery compartment).
3. If the USB power option is selected, connect the board to a PC using the included USB to mini-USB cable. The USB connection also enables the PC GUI functionality.

2.1.3.2 Satellite Board MSP-EXP430F5137Rx

1. Insert the two AAA batteries that are provided with the kit into the provided battery pack. Observe the correct polarity (see the markings inside the battery holder).

NOTE: If the board is powered by batteries or through the DC connector, the emulator is not powered and keeps the connected target device in RESET. Therefore, the Debug (SBW) selector must be set to the "Satellite" board for the User Experience software to operate.

NOTE: The battery pack must be disconnected from the satellite board before connecting the satellite board to the base board.

2. Connect the included battery pack to the MSP-EXP430F5137Rx via the 3-pin connector CON3.

2.2 Software Preparation

The steps described in the following sections are not required for the MSP-EXPCC430RFx Experimenter Kit stand-alone demo. For all other purposes that require PC software interaction, proper installation of the hardware driver and the software is required. To develop applications, it is also necessary to install one of the IDEs shown in the Tools and Software section of the MSP430 landing page www.ti.com/msp430. More information on how to start developing applications on the MSP-EXPCC430RFx platform or with the CC430 RF SoC devices can be found on the www.ti.com/msp-expcc430rfx.

All of the MSP-EXPCC430RFx User Experience firmware and software that is described in the following sections is provided in both binary (executable) and source code forms, along with drivers and supporting documentation. An installation package can be downloaded from MSP-EXPCC430RFx Software Download. The same software package link and updates can also be found in the MSP-EXPCC430RFx tool folder, http://www.ti.com/tool/msp-expcc430rfx. When this package is installed, all user experience application demos are stored in the Software folder in the selected installation directory (the default directory is C:\ti\msp430\), and the source code for the projects is installed to the src folder.

2.2.1 USB Driver

The USB driver must be installed for the PC to communicate with the MSP-EXP430F6137Rx based board through USB. If this is the first time the MSP-EXP430F6137Rx based board is connected to the PC, install the USB serial COM port driver located at [INSTALL_PATH]\USB_Driver\USB_Driver.exe.

NOTE: The USB drivers are integrated into the installer packages for the Code Composer Studio™ IDE (version 5+) or IAR Embedded Workbench™ IDE (version 5.20+) and do not require a second installation if one of these IDEs has already been installed.

Copyright © 2013, Texas Instruments Incorporated

2.2.2 Software Package Installation

Open the MSP-EXPCC430RFx Software Package to start the installation (MSP-EXPCC430RFx Software Download). Accept the license agreement and specify the install path (the default path is C:\ti\msp430). The installer populates the folder with the source code and binaries for the kit's User Experience firmware and the PC GUI, the hardware design files, and the USB driver files.

2.3 MSP-EXPCC430RFx User Experience

The MSP-EXPCC430RFx User Experience includes two projects:

1. Firmware applications that are pre-loaded on the MSP-EXP430F6137Rx Base Board and the MSP-EXP430F5137Rx Satellite Board to demonstrate a stand-alone wireless network using the SimpliciTI protocol.
2. When the Base Board is connected to the PC, the CC430 Wireless Network GUI program can be used to enable visualization of the wireless sensor network.

2.4 MSP-EXPCC430RFx Firmware Applications

The MSP-EXPCC430RFx User Experience application forms a star network using the SimpliciTI protocol. The Satellite Board acts as the End Device, and the Base Board acts as the Access Point. The Base Board can connect to a PC via the USB cable and transmit information back to the CC430 Wireless Network GUI running on the PC.

2.4.1 Access Point (AP or Hub)

The MSP-EXP430F6137Rx Base Board functions as the Access Point (also called the Hub), to create and broadcast the star network using the SimpliciTI protocol. It allows compatible End Devices (EDs) to join the network. The Base Board displays the status and sensor information of the devices on the network on its LCD. The Base Board also provides its own status and sensor (temperature and light sensors) information to the display. The Base Board captures more detailed network and device information and provides that information to the PC GUI through the UART-USB bridge if the USB connection is enabled between the board and the PC.

To start and operate the MSP-EXP430F6137Rx Base Board:

1. The MSP-EXP430F6137Rx Base Board displays "Access Point Up" on the LCD and starts accepting connections from the Satellite Boards.
2. When a new ED successfully joins the network, the LCD briefly displays "Added New Device" and resumes displaying network information.
3. When the network is active, the LCD displays the information of the AP and connected EDs. The first digit on the LCD indicates the address of the device (a number for an ED, 'H' for the Hub or AP). Subsequent digits show the temperature or RSSI value of the device.
4. The UP and DOWN buttons on the Base Board can be used to cycle through the device list.
5. The LEFT and DOWN buttons on the Base Board can be used to toggle the LCD to show the temperature or the received signal strength indicator (RSSI) value from the EDs. If the AP (Hub) is currently selected, the LCD switches between the temperature of the AP and the analog reading of the light sensor.

Copyright © 2013, Texas Instruments Incorporated

2.4.2 End Device (ED)

The MSP-EXP430F5137Rx Satellite Board functions as an End Device on the star network that is created using the SimpliciTI protocol.

1. When supplied with power, the Satellite Board seeks out compatible network broadcasts from an AP and attempts to join the network. During this phase, the on-board LED slowly toggles on and off to indicate each attempt.
2. After it successfully joins the network, the Satellite Board periodically measures its temperature and transmits its heartbeat message to the AP. Each transmission is indicated by the brief pulse of the LED.
3. Additionally, the push button can be used to transmit an *Alert message*, which causes the AP to show this ED's information on the LCD. The exclamation mark (!) on the LCD also briefly turns on, further highlighting the Alert message to the user.

2.5 CC430 Wireless Network GUI

The included CC430 Wireless Network GUI is designed to provide more detailed information as well as visual presentation of the network and device information. The GUI requires a PC USB connection from the MSP-EXPF6137Rx Base Board. The Base Board captures all status and sensor information from the devices (including the AP itself) and relays the prepared packets to the PC GUI. The GUI displays the wireless network in the star topology, showing the connected and disconnected devices along with their status information such as RSSI (relative distance from the AP), temperature, and remaining battery life.

Copyright © 2013, Texas Instruments Incorporated

3 MSP-EXPCC430RFx Experimenter Kit Hardware

3.1 MSP-EXP430F6137Rx Hardware Description

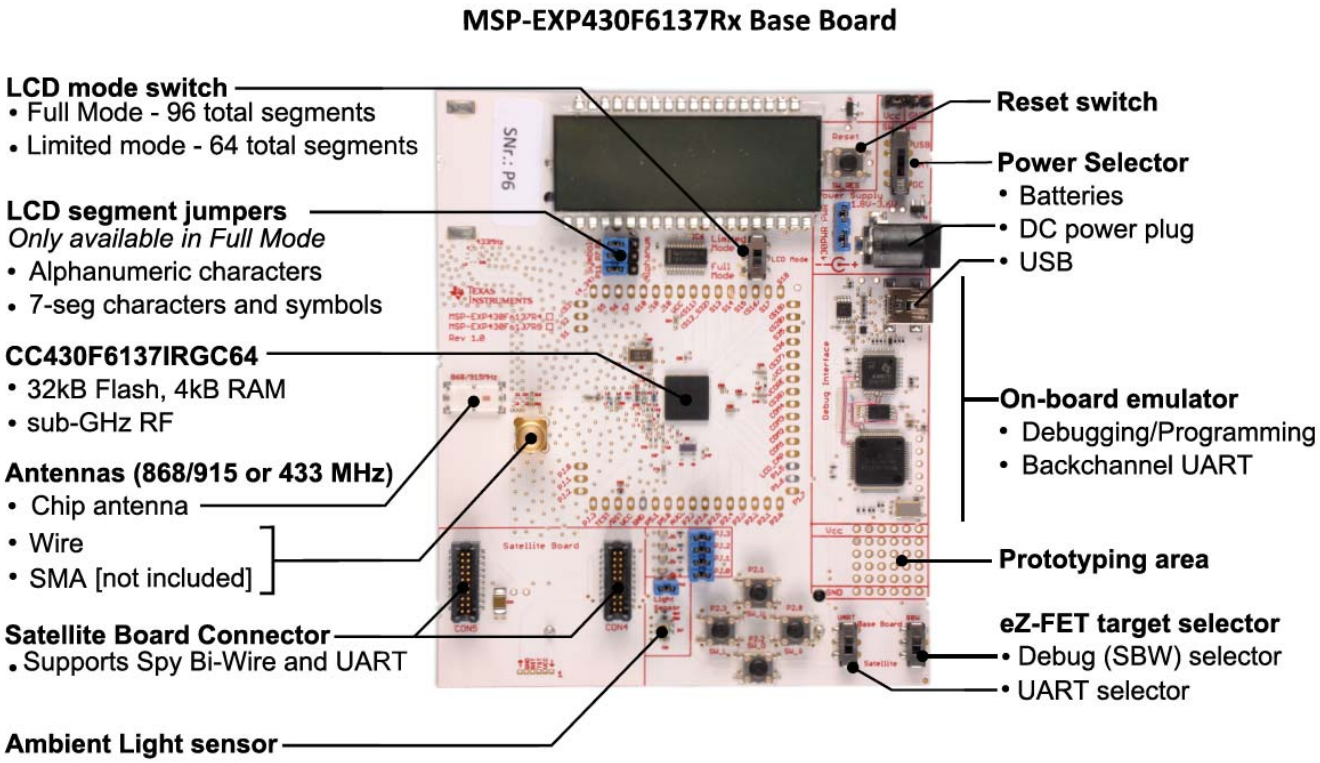

Figure 5. MSP-EXP430F6137Rx Base Board Hardware

NOTE:

1. The external voltage and current specifications for the DC connector are: 1.8 V to 3.6 V, 75 mA.
2. The PCBs shown in Figure 5 and Figure 6 are UL flammability rated 94V-0.

Copyright © 2013, Texas Instruments Incorporated

3.2 MSP-EXP430F5137Rx Hardware Description

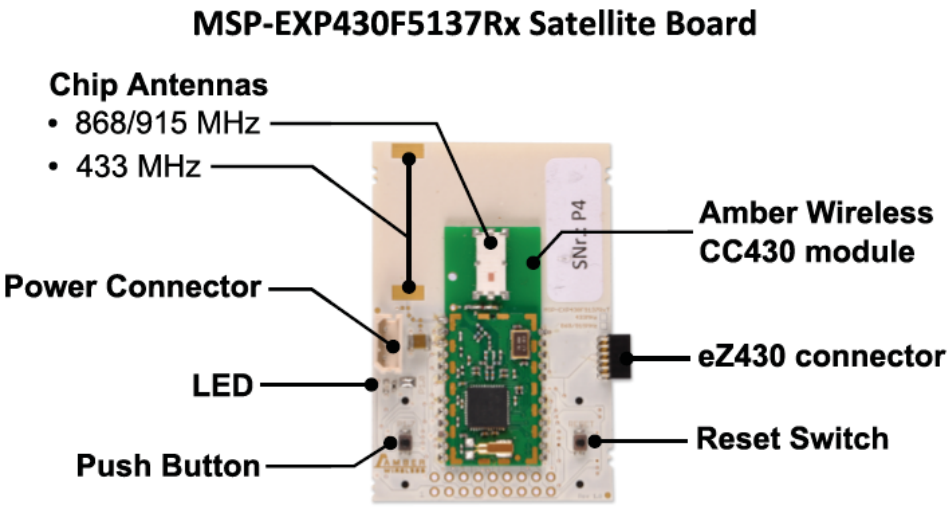

Figure 6. MSP-EXP430F5137Rx Satellite Board Hardware

3.3 Schematics

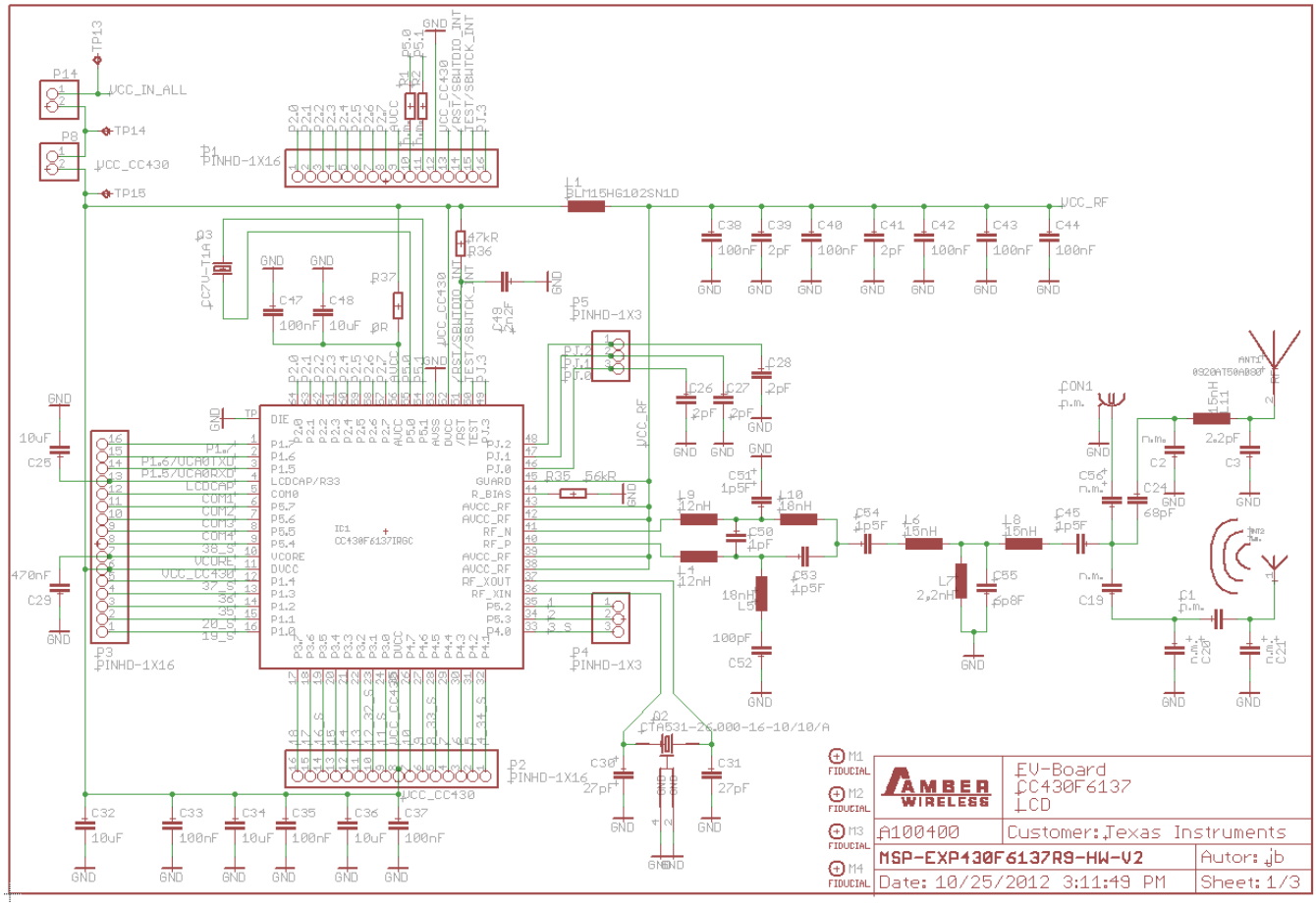

Figure 7. MSP-EXP430F6137Rx Base Board Schematic – Page 1

Copyright © 2013, Texas Instruments Incorporated

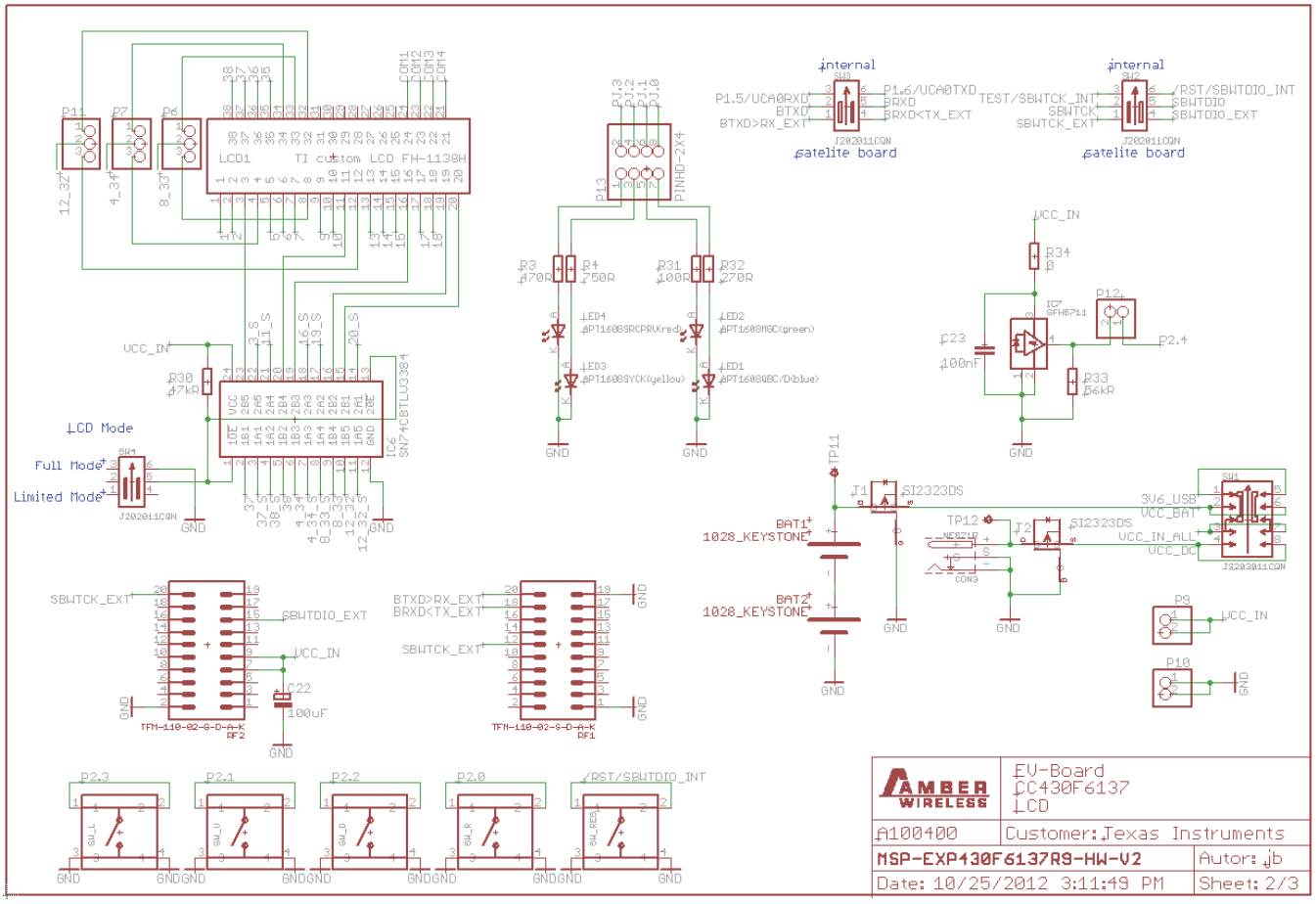

Figure 8. MSP-EXP430F6137Rx Base Board Schematic – Page 2

Copyright © 2013, Texas Instruments Incorporated

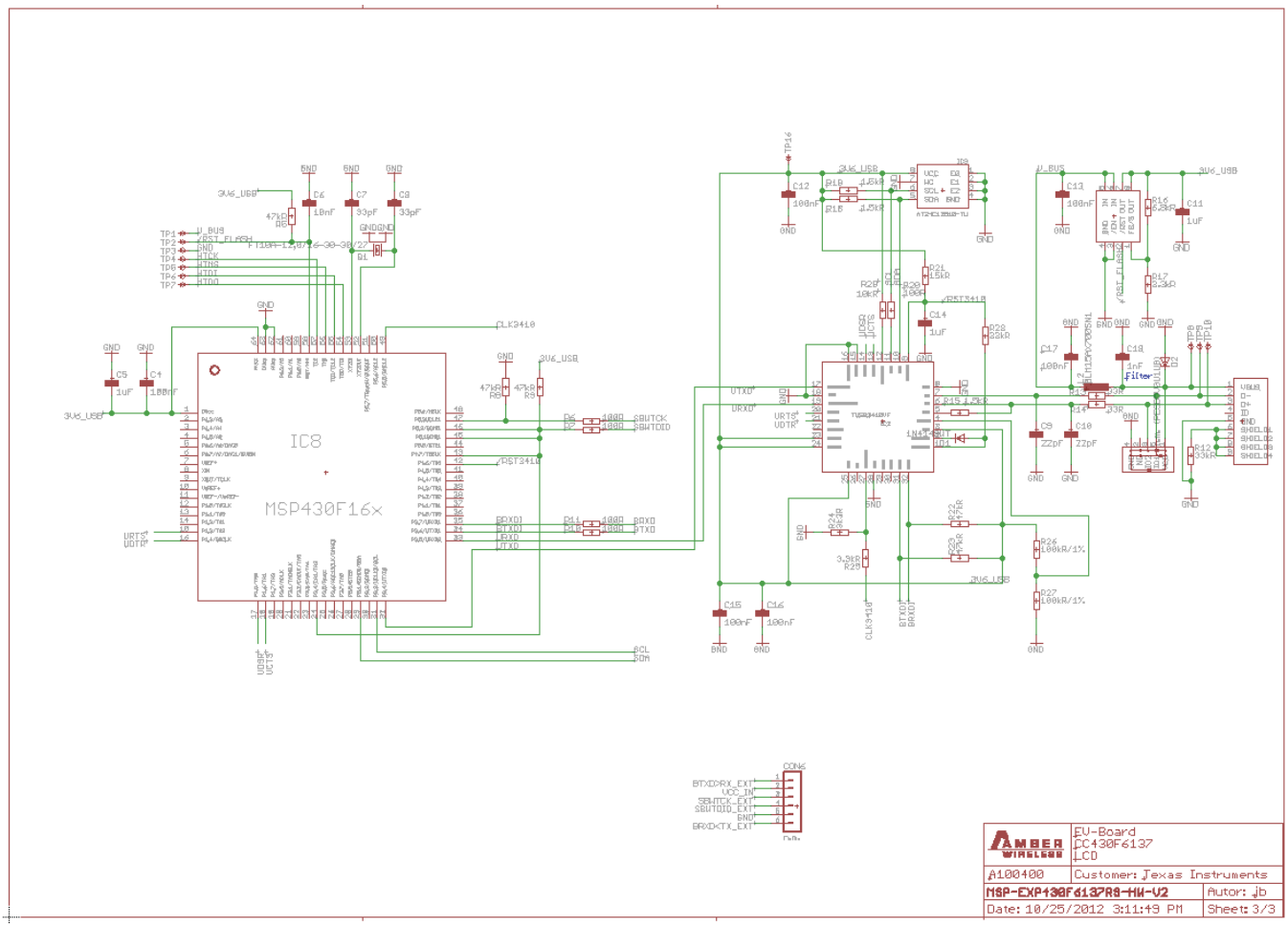

Figure 9. MSP-EXP430F6137Rx Base Board Schematic – Page 3

Copyright © 2013, Texas Instruments Incorporated

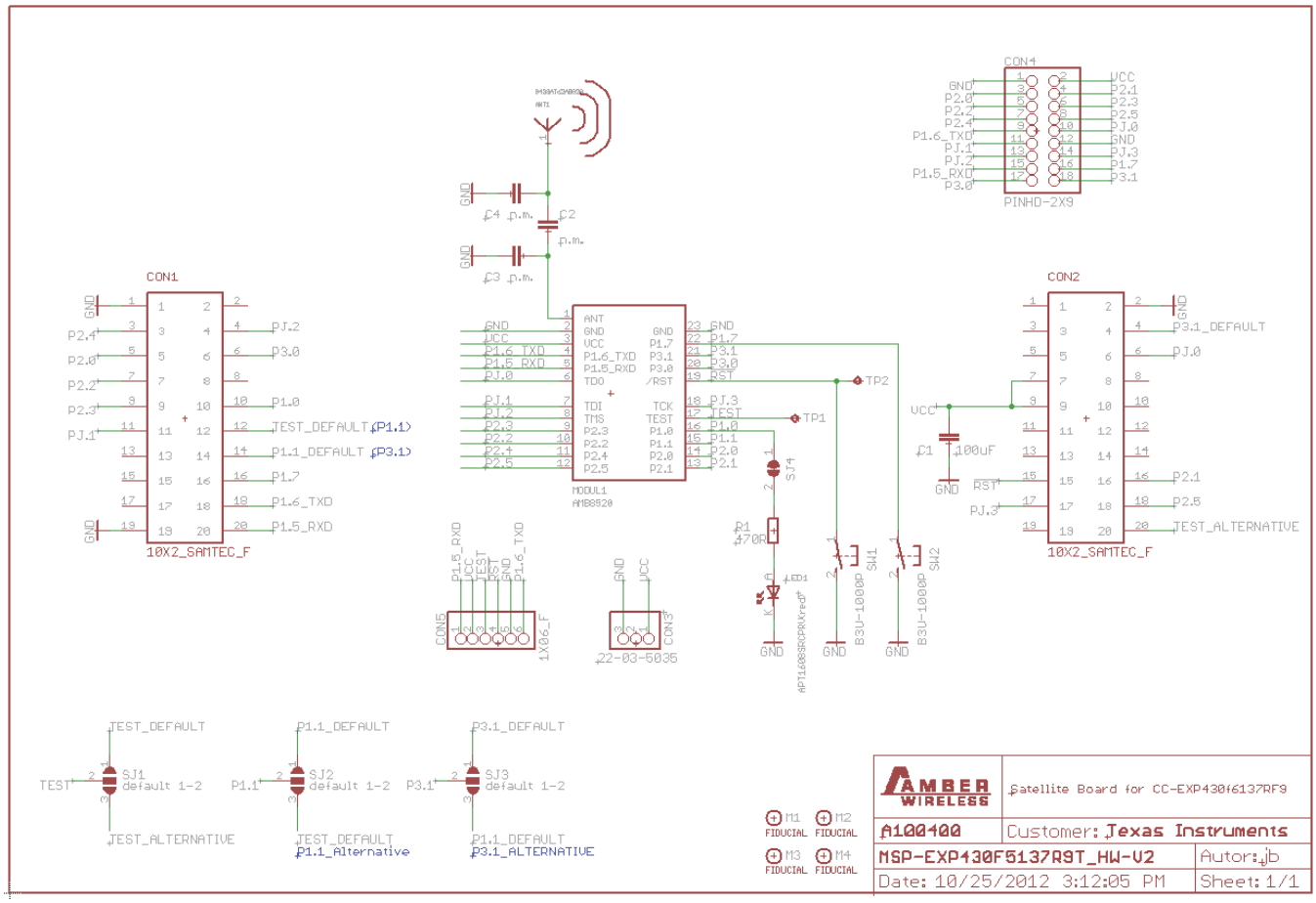

Figure 10. MSP-EXP430F5137Rx Satellite Board Schematic

Copyright © 2013, Texas Instruments Incorporated

3.4 PCB Layout

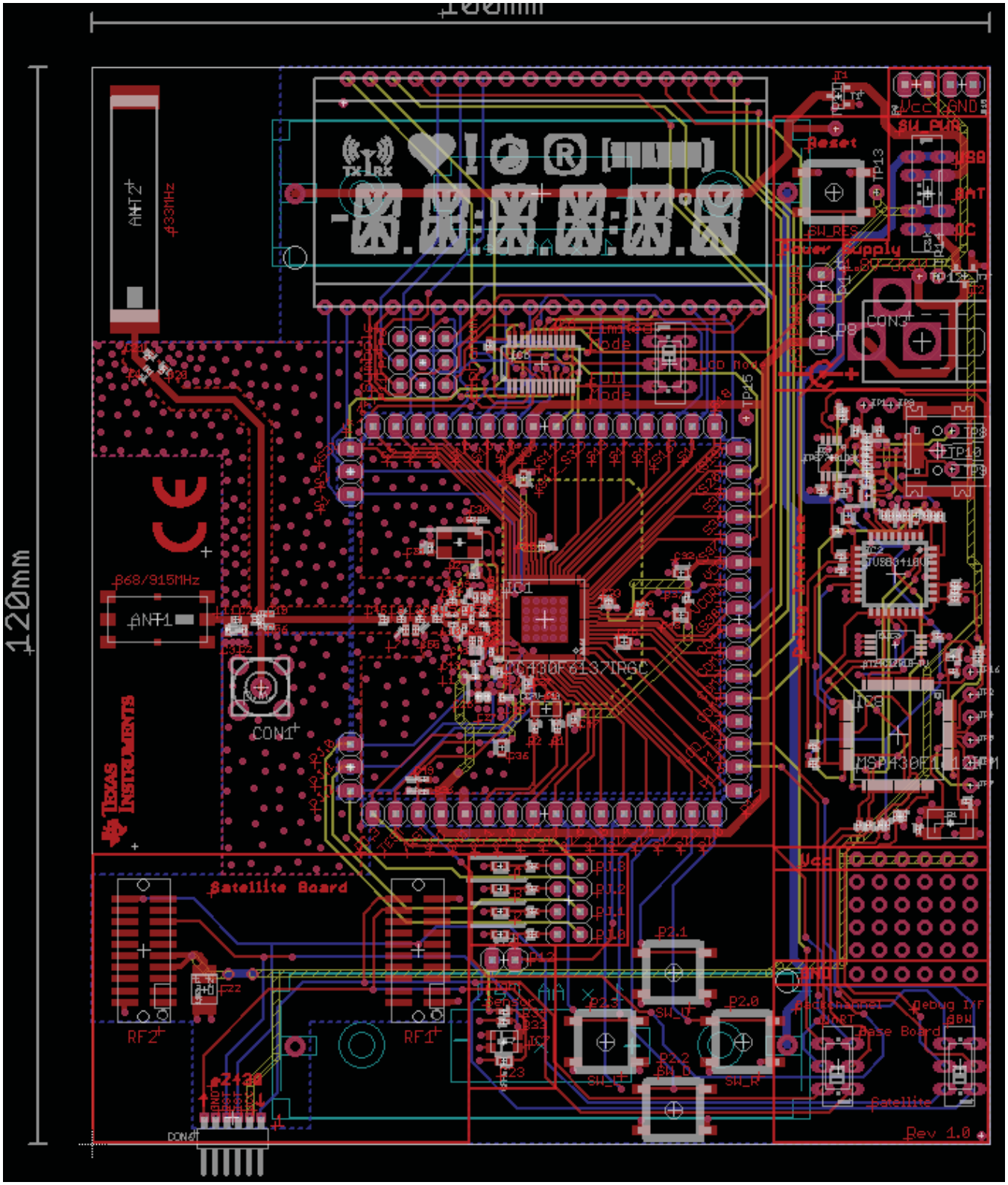

Figure 11. MSP-EXP430F6137Rx Base Board Layout

Copyright © 2013, Texas Instruments Incorporated

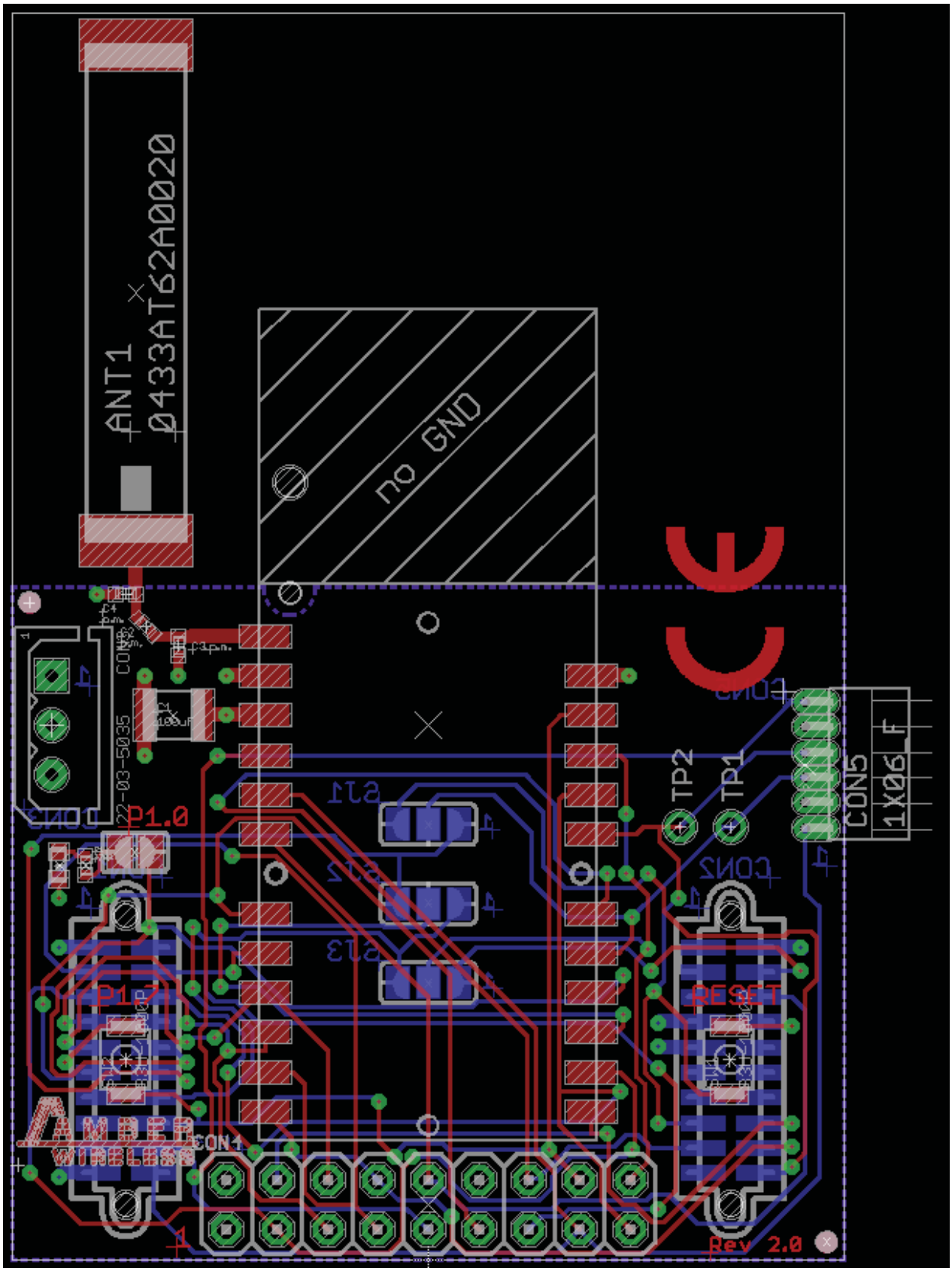

Figure 12. MSP-EXP430F5137Rx Satellite Board Layout

Copyright © 2013, Texas Instruments Incorporated

4 MSP-EXPCC430RFx Experimenter Kit Firmware

This section describes the firmware applications provided with the project. Detailed information on the project construction, the use of the 5xx/6xx Core Library, the use of the TI's SimpliciTI RF stack, and how to set up and import the projects is included. Source code for the CC430F6137 and the CC430F5137 firmware application is installed to the [INSTALL_PATH]\src\ folder as described in Section 2.2.

4.1 Import Project in Code Composer Studio™

To import the project into CCS:

1. Open CCS.
2. Select a new project workspace outside of the project folder.
3. Select Project-->Import Existing Project.
4. Browse to the [PROJECT_ROOT]\CCS folder.
5. Click Finish

NOTE: For CCS, while the project root is in the outer directory, the CCS project files are located inside the CCS folder. To enable the portability of the project, the file macros.ini is created to define the root. Additionally, all project code files (.c, .h) are added as linked resources with their relative path to the project root.

4.2 Open Project in IAR Embedded Workbench™

To open the project in IAR Embedded Workbench:

1. Open IAR.
2. Select Project → Add Existing Project
3. Browse to the [PROJECT_ROOT]\IAR folder
4. Select the project file *.ewp to open the project

4.3 SimpliciTI™ RF Protocol

The SimpliciTI protocol is a simple low-power RF network protocol designed for small RF networks. Such networks typically contain battery-operated devices that require long battery life, low data rate, low duty cycle, and have a limited number of nodes talking directly to each other or through an access point or range extenders. Access point and range extenders are not required but provide extra functionality such as store and forward messages. The SimpliciTI protocol requires minimal MCU resource requirements, which results in low system cost.

The SimpliciTI protocol was designed for easy implementation and deployment out-of-the-box on several TI RF platforms such as the MSP430 family of low-power MCUs and the CC1xxx, CC25xx, and CC430 transceivers and SoCs.

For more information on the SimpliciTI protocol, visit www.ti.com/simpliciti.

4.4 SimpliciTI Configuration for the MSP-EXPCC430RFx User Experience

The MSP-EXPCC430RFx User Experience application uses the SimpliciTI protocol in its star network configuration to enable a sensor hub with the MSP-EXP430F6137Rx Base Board and multiple sensor nodes (End Devices) with the MSP-EXP430F5137Rx Satellite Board. Minor configuration changes were made to the stack to support CC430F6137 and CC430F5137 devices on SimpliciTI.

The SimpliciTI network is configured to accept up to 16 end devices. In the radio configuration, the frequency settings are configured specifically for the frequency bands regulated by the geographical locations. Specifically they are 915-MHz band for the US, 868-MHz band for Europe, and 433-MHz for most other locations.

Copyright © 2013, Texas Instruments Incorporated

On the MSP-EXP430F5137Rx Satellite Board, two types of packets, heartbeat and alert, are prepared for SimpliciTI transmissions. The MSP-EXP430F6137Rx Base Board running the AP stack is configured to expect and process these two types of packets accordingly.

4.5 5xx/6xx Core Libraries

The CC430 devices are a member of the MSP430 5xx/6xx family devices. The 5xx/6xx family architecture introduces several new core peripherals to enhance the device performance, optimize power consumption, and allow for high flexibility and fine control of various aspects of the device core. These peripherals include the Power Management Module (PMM), Unified Clock System (UCS), Port Map (PMAP), and Flash modules. The 5xx/6xx core libraries provide a simple and efficient way of configuring and handling these modules. The MSP-EXPCC430RFx User Experience utilizes the 5xx/6xx core libraries to properly configure and start the CC430 core peripherals in the right sequence. The 5xx/6xx Core Libraries are incorporated into the MSP430Ware DriverLib. More information and download links for MSP430Ware and DriverLib can be found at http://software-dl.ti.com/msp430/msp430_public_sw/mcu/msp430/MSP430ware/latest/index_FDS.html.

5 MSP-EXPCC430RFx Experimenter Kit Software

The MSP-EXPCC430RFx software package (MSP-EXPCC430RFx Software Download) includes the CC430 Wireless Network GUI, which interfaces with the MSP-EXPCC430F6137Rx Base Board through USB to display the wireless network based on the data received through the USB connection. In addition to displaying the network topology, the GUI also offers vital information for the Access Point and the End Devices including the supply voltage (VCC), temperature, and the End Devices' Received Signal Strength Indicator (RSSI).

5.1 Requirements

When modifying the CC430 Wireless Network GUI source code, Microsoft Visual C++ and Qt package are required.

- Microsoft Visual C++ is part of the Microsoft Visual Studio suite, which can be downloaded at http://www.microsoft.com/visualstudio/en-us/products/2010-editions/express.
- Qt is a cross-platform application framework provided by Nokia, which can be downloaded at http://qt.nokia.com/downloads/.

6 References

1. MSP-EXPCC430RFx Experimenter Kit Product folder (www.ti.com/tool/msp-expcc430rfx)
2. MSP-EXPCC430RFx User Experience Software Package: MSP-EXPCC430RFx Software Download
3. CC430F6137 product folder: http://www.ti.com/product/cc430f6137
4. CC430F5137 product folder: http://www.ti.com/product/cc430f5137
5. CC430 User's Guide (SLAU259)
6. eZ430-Chronos Wiki: http://processors.wiki.ti.com/index.php/EZ430-Chronos
7. eZ430-Chronos product folder: http://www.ti.com/tool/ez430-chronos
8. MSP430 home page: http://www.ti.com/msp430
9. SimpliciTI product page folder: http://www.ti.com/simpliciti

Copyright © 2013, Texas Instruments Incorporated

7 Bills of Materials (BOM)

Table 1. MSP-EXP430F6137R9 Base Board (HW-V2.1) BOM

Part	Value	Tolerance	Package	Manufacturer	Details	Distributor	Part No.
Capacitors							
C1	n.m.		C0402	Johanson Technology			500R07S2R2BV4T
C2	n.m.		C0402				
C3	2.2pF		C0402	Johanson Technology			500R07S2R2BV4T
C4	100nF	10%	C0402				
C5	1uF	10%	C0603				
C6	10nF	10%	C0402				
C7	33pF	±0,25pF	C0402				
C8	33pF	±0,25pF	C0402				
C9	22pF	±0,25pF	C0402				
C10	22pF	±0,25pF	C0402				
C11	1uF	10%	C0603				
C12	100nF	10%	C0402				
C13	100nF	10%	C0402				
C14	1uF	10%	C0603				
C15	100nF	10%	C0402				
C16	100nF	10%	C0402				
C17	100nF	10%	C0402				
C18	1nF	10%	C0402				
C19	n.m.		C0402				
C20	n.m.		C0402				
C21	n.m.		C0402				
C22	100uF	20%	C-POLB/3528				
C23	100nF	10%	C0603				
C24	68pF		C0402				
C25	10uF	20%	C0603				
C26	2pF	±0,25pF	C0402				
C27	2pF	±0,25pF	C0402				
C28	2pF	±0,25pF	C0402				
C29	470nF	10%	C0402				
C30	27pF	±0,25pF	C0402				
C31	27pF	±0,25pF	C0402				
C32	10uF	10%	C0603				
C33	100nF	10%	C0402				
C34	10uF	20%	C0603				
C35	100nF	10%	C0402				
C36	10uF	20%	C0603				
C37	100nF	10%	C0402				
C38	100nF	10%	C0402				
C39	2pF	±0,25pF	C0402				
C40	100nF	10%	C0402				
C41	2pF	±0,25pF	C0402				
C42	100nF	10%	C0402				
C43	100nF	10%	C0402				
C44	100nF	10%	C0402				
C45	1.5pF		C0402				
C47	100nF	10%	C0402				
C48	10uF	20%	C0603				

Copyright © 2013, Texas Instruments Incorporated

Table 1. MSP-EXP430F6137R9 Base Board (HW-V2.1) BOM (continued)

Part	Value	Tolerance	Package	Manufacturer	Details	Distributor	Part No.
C49	2.2nF	±0,25pF	C0402				
C50	1pF	±0,25pF	C0402				
C51	1.5pF	±0,25pF	C0402				
C52	100pF	10%	C0402				
C53	1.5pF	±0,25pF	C0402				
C54	1.5pF	±0,25pF	C0402				
C55	6.8pF	±0,25pF	C0402				
C56	n.m.		C0402				
Diodes							
D1	1N4148WT		SOD523				
D2	n.m.		SOD523		(PESD5V0U1UB)		
Inductors							
L1	BLM15HG102SN1D		L0402	Murata	Ferrit, SMT, 250mA		BLM15HG102SN1D
L2	BLM15AX700SN1		L0402	Murata	Ferrit, SMT, 780mA		BLM15AX700SN1
L4	12nH	5%	L0402	Johanson Technology			L-07W12NJV4S
L5	18nH	5%	L0402	Johanson Technology			L-07W18NJV4S
L6	15nH	5%	L0402	Johanson Technology			L-07W15NJV4S
L7	2,2nH	±0,2nH	L0402	Johanson Technology			L-07W2N2JV4S
L8	15nH	5%	L0402	Johanson Technology			L-07W15NJV4S
L9	12nH	5%	L0402	Johanson Technology			L-07W12NJV4S
L10	18nH	5%	L0402	Johanson Technology			L-07W18NJV4S
L11	15nH		L0402	Johanson Technology			L-07C15NJV6T / L-07W15NJV6T
Resistors							
R1	n.m.	1%	R0402				
R2	n.m.	1%	R0402				
R3	470R	1%	R0402				
R4	750R	1%	R0402				
R5	47kR	1%	R0402				
R6	100R	1%	R0402				
R7	100R	1%	R0402				
R8	47kR	1%	R0402				
R9	47kR	1%	R0402				
R10	100R	1%	R0402				
R11	100R	1%	R0402				
R12	33kR	1%	R0402				
R13	33R	1%	R0402				
R14	33R	1%	R0402				
R15	1.5kR	1%	R0402				
R16	6.8kR	1%	R0402				
R17	3.3kR	1%	R0402				
R18	1.5kR	1%	R0402				
R19	1.5kR	1%	R0402				
R20	100R	1%	R0402				
R21	15kR	1%	R0402				
R22	47kR	1%	R0402				
R23	47kR	1%	R0402				

Copyright © 2013, Texas Instruments Incorporated

Table 1. MSP-EXP430F6137R9 Base Board (HW-V2.1) BOM (continued)

Part	Value	Tolerance	Package	Manufacturer	Details	Distributor	Part No.
R24	3.3kR	1%	R0402				
R25	3.3kR	1%	R0402				
R26	100kR	1%	R0402				
R27	100kR	1%	R0402				
R28	33kR	1%	R0402				
R29	10kR	1%	R0402				
R30	47kR	1%	R0402				
R31	100R	1%	R0402				
R32	270R	1%	R0402				
R33	56kR	1%	R0402				
R34	0R	1%	R0402				
R35	56kR	1%	R0402				
R36	47kR	1%	R0402				
R37	0R	1%	R0402				
IC							
IC1	CC430F6137IRGC		S-PQFP-N64	TI			CC430F6137
IC2	TUSB3410VF		VF32	TI			TUSB3410VF
IC3	AT24C12810-TU		TSSOP8	Atmel			AT24C12810-TU
IC4	TPS77301DGK		MSO8	TI			TPS77301DGK
IC5	TPD2E001DRL		SOT533-5	TI			TPD2E001DRL
IC6	SN74CBTLV3384D BQR		24-SSOP	TI			SN74CBTLV3384
IC7	SFH5711		SFH5711	Osram			SFH5711
IC8	MSP430F1612IPM		PM/PAG64	TI			MSP430F16x
Miscellaneous							
SW1	JS203011CQN		JS203011CQN	C&K Components			JS203011CQN
SW2	J202011CQN		JS202011CQN	C&K Components			JS203011CQN
SW3	J202011CQN		JS202011CQN	C&K Components			JS203011CQN
SW4	J202011CQN		JS202011CQN	C&K Components			JS203011CQN
SW_D	FSM2JSMA		B3FS-1002P	Omron			B3FS-1002P
SW_L	FSM2JSMA		B3FS-1002P	Omron			B3FS-1002P
SW_R	FSM2JSMA		B3FS-1002P	Omron			B3FS-1002P
SW_RES	FSM2JSMA		B3FS-1002P	Omron			B3FS-1002P
SW_U	FSM2JSMA		B3FS-1002P	Omron			B3FS-1002P
ANT1	0920AT50A080			Johanson Technology	868/915MHz		0920AT50A080
ANT2	n.m.			Johanson Technology	433MHz		0433AT62A0020
BAT1	1028_KEYSTONE			Keystone			1028
BAT2	1028_KEYSTONE			Keystone			1028
LCD1	FH-1138H			TI			FH-1138H
LED1	APT1608QBC/D(blue)		LED0603	Kingbright	blue		APT1608QBC/D
LED2	APT1608MGC(green)		LED0603	Kingbright	green		APT1608MGC
LED3	APT1608SYCK(yellow)		LED0603	Kingbright	yellow		APT1608SYCK
LED4	APT1608SRCPRV(red)		LED0603	Kingbright	red		APT1608SRCPRV
Q1	FT10A-12,0/16-30-30/27		5032-4PIN	Coftech			12MHz, 16pF, 30ppm

Copyright © 2013, Texas Instruments Incorporated

Table 1. MSP-EXP430F6137R9 Base Board (HW-V2.1) BOM (continued)

Part	Value	Tolerance	Package	Manufacturer	Details	Distributor	Part No.
Q2	CTA531-26.000-16-10/10/A		NX5032	Compotek	hf crystal		CTA531-26.000-16-10/10/A
Q3	CC7V-T1A_32,768kHz_12,5pF	±20ppm	3216	Micro Crystal	watch crystal		CC7V-T1A_32,768kHz_12,5pF
T1	SI2323DS		SOT23-3	Vishay	P-Channel 20-V MOSFET		
T2	SI2323DS		SOT23-3	Vishay	P-Channel 20-V MOSFET		
P1	n.m.		1X16				provided separately by EMS
P2	n.m.		1X16				provided separately by EMS
P3	n.m.		1X16				provided separately by EMS
P4	n.m.		1X3				provided separately by EMS
P5	n.m.		1X3				provided separately by EMS
P6	PINHD-1X3		1X3		or identical in construction	MPE Garry	0871-1-003-0-T-xso-1260
P7	PINHD-1X3		1X3		or identical in construction	MPE Garry	0871-1-003-0-T-xso-1260
P8	PINHD-1X2		1X2		or identical in construction	MPE Garry	0871-1-002-0-T-xso-1260
P9	PINHD-1X2		1X2		or identical in construction	MPE Garry	0871-1-002-0-T-xso-1260
P10	PINHD-1X2		1X2		or identical in construction	MPE Garry	0871-1-002-0-T-xso-1260
P11	PINHD-1X3		1X3		or identical in construction	MPE Garry	0871-1-003-0-T-xso-1260
P12	PINHD-1X2		1X2		or identical in construction	MPE Garry	0871-1-002-0-T-xso-1260
P13	PINHD-2X4		2X4		or identical in construction	MPE Garry	0871-2-004-0-T-xso-1260
P14	PINHD-1X2		1X2		or identical in construction	MPE Garry	0871-1-002-0-T-xso-1260
CON1	n.m.		BU-SMA-V		SMA Female Connector		
CON2	USB-MINI_2486_01		USB-MINI_2486_01	LUMBERG			2486 01
CON3	NEB21R		DC_BUCHSE_2,1MM	LUMBERG			NEB 21 R
CON4	TFM-110-02-S-D-A-K		10X2_SAMTEC_M	SAMTEC			TFM-110-02-S-D-A-K
CON5	TFM-110-02-S-D-A-K		10X2_SAMTEC_M	SAMTEC			TFM-110-02-S-D-A-K
CON6	n.m.		STL_31-06 SGU	MPE			STL_31-06 SGU
PCB							
			1,283mm x 100mm x 120mm		FR4, TG150, see CC-EXP-4306137RF9-HW-V1-PCB.pdf		

Copyright © 2013, Texas Instruments Incorporated

Table 2. MSP-EXP430F5137R9T Satellite Board (HW-V2.0) BOM

Part	Value	Tolerance	Package	Manufacturer	Details	Distributor	Part No.
Capacitors							
C1	100uF		C1210				
C2	n.m.		C0402				
C3	n.m.		C0402				
C4	n.m.		C0402				
Resistors							
R1	470		R0402				
Miscellaneous							
SW1	B3U-1000P		B3U-1000P	Omron			M66210110
SW2	B3U-1000P		B3U-1000P	Omron			M66210110
MODUL1	A85200101					AMBER wireless	AMB8520 - ungeprüft
CON1	10X2_SAMTEC_F			Samtec	10x2, female		SFM-110-02-S-D-A-K
CON2	10X2_SAMTEC_F			Samtec	10x2, female		SFM-110-02-S-D-A-K
CON3	22-03-5035		1x3, 2.5mm	Molex	male		22-03-5035
CON4	n.m.		2x9, 2.54mm		Pinhead		
CON5	BL31-006U		1x6, 1.27mm	MPE		MPE	BL31-006U
LED1	APT1608SRCPRV		0603	Kingbright	red		
ANT1	n.m.			Johanson	433MHz, SMD	Johanson	0433AT62A0020
PCB							

Copyright © 2013, Texas Instruments Incorporated

Table 3. MSP-EXP430F6137R4 Base Board (HW-V2.1) BOM

Part	Value	Tol.	Package	Manufacturer or Distributor	Comments	Part No.
Capacitors						
C1	2.2pF	±0, 25pF	C0402	Johanson Technology	specific for 433MHz var ***R4	500R07S2R2BV4T
C2	n.m.		C0402			
C3	n.m.		C0402	Johanson Technology	specific for 433MHz var ***R4	500R07S2R2BV4T
C4	100nF	10%	C0402			
C5	1uF	10%	C0603			
C6	10nF	10%	C0402			
C7	33pF	5%	C0402			
C8	33pF	5%	C0402			
C9	22pF	5%	C0402			
C10	22pF	5%	C0402			
C11	1uF	10%	C0603			
C12	100nF	10%	C0402			
C13	100nF	10%	C0402			
C14	1uF	10%	C0603			
C15	100nF	10%	C0402			
C16	100nF	10%	C0402			
C17	100nF	10%	C0402			
C18	1nF	10%	C0402			
C19	220pF	10%	C0402		specific for 433MHz var ***R4	
C20	n.m.		C0402			
C21	n.m.		C0402			
C22	100uF	20%	C-POLB/3528			
C23	100nF	10%	C0603			
C24	n.m.		C0402		specific for 433MHz var ***R4	
C25	10uF	20%	C0603			
C26	2pF	±0, 25pF	C0402			
C27	2pF	±0, 25pF	C0402			
C28	2pF	±0, 25pF	C0402			
C29	470nF	10%	C0402			
C30	27pF	5%	C0402			
C31	27pF	5%	C0402			
C32	10uF	10%	C0603			
C33	100nF	10%	C0402			
C34	10uF	20%	C0603			
C35	100nF	10%	C0402			
C36	10uF	20%	C0603			
C37	100nF	10%	C0402			
C38	100nF	10%	C0402			
C39	2pF	±0, 25pF	C0402			
C40	100nF	10%	C0402			
C41	2pF	±0, 25pF	C0402			
C42	100nF	10%	C0402			
C43	100nF	10%	C0402			
C44	100nF	10%	C0402			
C45	220pF	10%	C0402		specific for 433MHz var ***R4	
C47	100nF	10%	C0402			
C48	10uF	20%	C0603			

Copyright © 2013, Texas Instruments Incorporated

Table 3. MSP-EXP430F6137R4 Base Board (HW-V2.1) BOM (continued)

Part	Value	Tol.	Package	Manufacturer or Distributor	Comments	Part No.
C49	2.2nF	10%	C0402			
C50	2.7pF	±0,25pF	C0402		specific for 433MHz var ***R4	
C51	3.9pF	±0,25pF	C0402		specific for 433MHz var ***R4	
C52	220pF	10%	C0402		specific for 433MHz var ***R4	
C53	3.9pF	±0,25pF	C0402		specific for 433MHz var ***R4	
C54	220pF	10%	C0402		specific for 433MHz var ***R4	
C55	4.7pF	±0,25pF	C0402		specific for 433MHz var ***R4	
C56	n.m.		C0402			
Diodes						
D1	1N4148WT		SOD523			
D2	n.m.		SOD523		(PESD5V0U1UB)	
Inductors						
L1	BLM15HG102SN1D		L0402	Murata	Ferrit, SMT, 250mA	BLM15HG102SN1D
L2	BLM15AX700SN1		L0402	Murata	Ferrit, SMT, 780mA	BLM15AX700SN1
L4	16nH	5%	L0402	Johanson Technology	specific for 433MHz var ***R4	L-07W16NJV4S
L5	27nH	5%	L0402	Johanson Technology	specific for 433MHz var ***R4	L-07W27NJV4S
L6	47nH	5%	L0402	Johanson Technology	specific for 433MHz var ***R4	L-07W47NJV4S
L7	n.m.		L0402	Johanson Technology	specific for 433MHz var ***R4	
L8	51nH	5%	L0402	Johanson Technology	specific for 433MHz var ***R4	L-07W51NJV4S
L9	16nH	5%	L0402	Johanson Technology	specific for 433MHz var ***R4	L-07W16NJV4S
L10	27nH	5%	L0402	Johanson Technology	specific for 433MHz var ***R4	L-07W27NJV4S
L11	n.m.		L0402	Johanson Technology	specific for 433MHz var ***R4	
Resistors						
R1	n.m.	1%	R0402			
R2	n.m.	1%	R0402			
R3	470R	1%	R0402			
R4	750R	1%	R0402			
R5	47kR	1%	R0402			
R6	100R	1%	R0402			
R7	100R	1%	R0402			
R8	47kR	1%	R0402			
R9	47kR	1%	R0402			
R10	100R	1%	R0402			
R11	100R	1%	R0402			
R12	33kR	1%	R0402			
R13	33R	1%	R0402			
R14	33R	1%	R0402			
R15	1.5kR	1%	R0402			
R16	6.8kR	1%	R0402			
R17	3.3kR	1%	R0402			
R18	1.5kR	1%	R0402			

Copyright © 2013, Texas Instruments Incorporated

Table 3. MSP-EXP430F6137R4 Base Board (HW-V2.1) BOM (continued)

Part	Value	Tol.	Package	Manufacturer or Distributor	Comments	Part No.
R19	1.5kR	1%	R0402			
R20	100R	1%	R0402			
R21	15kR	1%	R0402			
R22	47kR	1%	R0402			
R23	47kR	1%	R0402			
R24	3.3kR	1%	R0402			
R25	3.3kR	1%	R0402			
R26	100kR	1%	R0402			
R27	100kR	1%	R0402			
R28	33kR	1%	R0402			
R29	10kR	1%	R0402			
R30	47kR	1%	R0402			
R31	100R	1%	R0402			
R32	270R	1%	R0402			
R33	56kR	1%	R0402			
R34	0R	1%	R0402			
R35	56kR	1%	R0402			
R36	47kR	1%	R0402			
R37	0R	1%	R0402			
IC						
IC1	CC430F6137IRGC		S-PQFP-N64	TI		CC430F6137
IC2	TUSB3410VF		VF32	TI		TUSB3410VF
IC3	AT24C12810-TU		TSSOP8	Atmel		AT24C12810-TU
IC4	TPS77301DGK		MSO8	TI		TPS77301DGK
IC5	TPD2E001DRL		SOT533-5	TI		TPD2E001DRL
IC6	SN74CBTLV3384DBQR		24-SSOP	TI		SN74CBTLV3384
IC7	SFH5711		SFH5711	Osram		SFH5711
IC8	MSP430F1612IPM		PM/PAG64	TI		MSP430F16x
Miscellaneous						
SW1	JS203011CQN		JS203011CQN	C&K Components		JS203011CQN
SW2	J202011CQN		JS202011CQN	C&K Components		JS203011CQN
SW3	J202011CQN		JS202011CQN	C&K Components		JS203011CQN
SW4	J202011CQN		JS202011CQN	C&K Components		JS203011CQN
SW_D	FSM2JSMA		B3FS-1002P	Omron		B3FS-1002P
SW_L	FSM2JSMA		B3FS-1002P	Omron		B3FS-1002P
SW_R	FSM2JSMA		B3FS-1002P	Omron		B3FS-1002P
SW_RES	FSM2JSMA		B3FS-1002P	Omron		B3FS-1002P
SW_U	FSM2JSMA		B3FS-1002P	Omron		B3FS-1002P
ANT1	n.m.			Johanson Technology	868/915MHz Antenna	0920AT50A080
ANT2	0433AT62A0020			Johanson Technology	433MHz Antenna	0433AT62A0020
BAT1	1028_KEYSTONE			Keystone		1028
BAT2	1028_KEYSTONE			Keystone		1028
LCD1	FH-1138H			TI		FH-1138H
LED1	APT1608QBC/D(blue)		LED0603	Kingbright	blue	APT1608QBC/D
LED2	APT1608MGC(green)		LED0603	Kingbright	green	APT1608MGC
LED3	APT1608SYCK(yellow)		LED0603	Kingbright	yellow	APT1608SYCK

Copyright © 2013, Texas Instruments Incorporated

Table 3. MSP-EXP430F6137R4 Base Board (HW-V2.1) BOM (continued)

Part	Value	Tol.	Package	Manufacturer or Distributor	Comments	Part No.
LED4	APT1608SRCPRV(red)		LED0603	Kingbright	red	APT1608SRCPRV
Q1	FT10A-12,0/16-30-30/27		5032-4PIN	Coftech		12MHz, 16pF, 30ppm
Q2	CTA531-26.000-16-10/10/A		NX5032	Compotek	hf crystal	CTA531-26.000-16-10/10/A
Q3	CC7V-T1A_32,768kHz_12,5pF	±20ppm	3216	Micro Crystal	watch crystal	CC7V-T1A_32,768kHz_12,5pF
T1	SI2323DS		SOT23-3	Vishay	P-Channel 20-V MOSFET	
T2	SI2323DS		SOT23-3	Vishay	P-Channel 20-V MOSFET	
P1	n.m.		1X16			provided separately by EMS
P2	n.m.		1X16			provided separately by EMS
P3	n.m.		1X16			provided separately by EMS
P4	n.m.		1X3			provided separately by EMS
P5	n.m.		1X3			provided separately by EMS
P6	PINHD-1X3		1X3	MPE Garry	or identical in construction	0871-1-003-0-T-xso-1260
P7	PINHD-1X3		1X3	MPE Garry	or identical in construction	0871-1-003-0-T-xso-1260
P8	PINHD-1X2		1X2	MPE Garry	or identical in construction	0871-1-002-0-T-xso-1260
P9	PINHD-1X2		1X2	MPE Garry	or identical in construction	0871-1-002-0-T-xso-1260
P10	PINHD-1X2		1X2	MPE Garry	or identical in construction	0871-1-002-0-T-xso-1260
P11	PINHD-1X3		1X3	MPE Garry	or identical in construction	0871-1-003-0-T-xso-1260
P12	PINHD-1X2		1X2	MPE Garry	or identical in construction	0871-1-002-0-T-xso-1260
P13	PINHD-2X4		2X4	MPE Garry	or identical in construction	0871-2-004-0-T-xso-1260
P14	PINHD-1X2		1X2	MPE Garry	or identical in construction	0871-1-002-0-T-xso-1260
CON1	n.m.		BU-SMA-V		SMA Female Connector	
CON2	USB-MINI_2486_01		USB-MINI_2486_01	LUMBERG		2486 01
CON3	NEB21R		DC_BUCHSE_2, 1MM	LUMBERG		NEB 21 R
RF1	TFM-110-02-S-D-A-K		10X2_SAMTEC_M	SAMTEC		TFM-110-02-S-D-A-K
RF2	TFM-110-02-S-D-A-K		10X2_SAMTEC_M	SAMTEC		TFM-110-02-S-D-A-K
CON6	n.m.		STL_31-06 SGU	MPE		STL_31-06 SGU
PCB						
			1,283 mm x 100mm x 120mm,		FR4, TG150, see CC-EXP-4306137RF9-HW-V2-PCB.pdf	

Copyright © 2013, Texas Instruments Incorporated

Table 4. MSP-EXP430F5137R4T Satellite Board (HW-V2.0) BOM

Part	Value	Tol.	Package	Manufacturer	Details	Distributor	Part No.
Capacitors							
C1	100uF		C1210				
C2	3,3pF		C0402				
C3	n.m.		C0402				
C4	n.m.		C0402				
Resistors							
R1	470		R0402				
Miscellaneous							
SW1	B3U-1000P		B3U-1000P	Omron			M66210110
SW2	B3U-1000P		B3U-1000P	Omron			M66210110
MODUL1	A45201101					AMBER wireless	AMB4520-1, ungeprüft
CON1	10X2_SAMTEC_F			Samtec	10x2, female		SFM-110-02-S-D-A-K
CON2	10X2_SAMTEC_F			Samtec	10x2, female		SFM-110-02-S-D-A-K
CON3	22-03-5035		1x3, 2.5mm	Molex	male		22-03-5035
CON4	n.m.		2x9, 2.54mm		Pinhead		
CON5	BL31-006U		1x6, 1.27mm	MPE		MPE	BL31-006U
LED1	APT1608SRCPRV		0603	Kingbright	red		
ANT1	0433AT62A0020			Johanson	433MHz, SMD	Johanson	0433AT62A0020
PCB							

Copyright © 2013, Texas Instruments Incorporated

EVALUATION BOARD/KIT/MODULE (EVM) ADDITIONAL TERMS

Texas Instruments (TI) provides the enclosed Evaluation Board/Kit/Module (EVM) under the following conditions:

The user assumes all responsibility and liability for proper and safe handling of the goods. Further, the user indemnifies TI from all claims arising from the handling or use of the goods.

Should this evaluation board/kit not meet the specifications indicated in the User's Guide, the board/kit may be returned within 30 days from the date of delivery for a full refund. THE FOREGOING LIMITED WARRANTY IS THE EXCLUSIVE WARRANTY MADE BY SELLER TO BUYER AND IS IN LIEU OF ALL OTHER WARRANTIES, EXPRESSED, IMPLIED, OR STATUTORY, INCLUDING ANY WARRANTY OF MERCHANTABILITY OR FITNESS FOR ANY PARTICULAR PURPOSE. EXCEPT TO THE EXTENT OF THE INDEMNITY SET FORTH ABOVE, NEITHER PARTY SHALL BE LIABLE TO THE OTHER FOR ANY INDIRECT, SPECIAL, INCIDENTAL, OR CONSEQUENTIAL DAMAGES.

Please read the User's Guide and, specifically, the Warnings and Restrictions notice in the User's Guide prior to handling the product. This notice contains important safety information about temperatures and voltages. For additional information on TI's environmental and/or safety programs, please visit www.ti.com/esh or contact TI.

No license is granted under any patent right or other intellectual property right of TI covering or relating to any machine, process, or combination in which such TI products or services might be or are used. TI currently deals with a variety of customers for products, and therefore our arrangement with the user is not exclusive. TI assumes no liability for applications assistance, customer product design, software performance, or infringement of patents or services described herein.

REGULATORY COMPLIANCE INFORMATION

As noted in the EVM User's Guide and/or EVM itself, this EVM and/or accompanying hardware may or may not be subject to the Federal Communications Commission (FCC) and Industry Canada (IC) rules.

For EVMs **not** subject to the above rules, this evaluation board/kit/module is intended for use for ENGINEERING DEVELOPMENT, DEMONSTRATION OR EVALUATION PURPOSES ONLY and is not considered by TI to be a finished end product fit for general consumer use. It generates, uses, and can radiate radio frequency energy and has not been tested for compliance with the limits of computing devices pursuant to part 15 of FCC or ICES-003 rules, which are designed to provide reasonable protection against radio frequency interference. Operation of the equipment may cause interference with radio communications, in which case the user at his own expense will be required to take whatever measures may be required to correct this interference.

General Statement for EVMs including a radio

User Power/Frequency Use Obligations: This radio is intended for development/professional use only in legally allocated frequency and power limits. Any use of radio frequencies and/or power availability of this EVM and its development application(s) must comply with local laws governing radio spectrum allocation and power limits for this evaluation module. It is the user's sole responsibility to only operate this radio in legally acceptable frequency space and within legally mandated power limitations. Any exceptions to this are strictly prohibited and unauthorized by Texas Instruments unless user has obtained appropriate experimental/development licenses from local regulatory authorities, which is responsibility of user including its acceptable authorization.

For EVMs annotated as FCC – FEDERAL COMMUNICATIONS COMMISSION Part 15 Compliant

Caution

This device complies with part 15 of the FCC Rules. Operation is subject to the following two conditions: (1) This device may not cause harmful interference, and (2) this device must accept any interference received, including interference that may cause undesired operation.

Changes or modifications not expressly approved by the party responsible for compliance could void the user's authority to operate the equipment.

FCC Interference Statement for Class A EVM devices

This equipment has been tested and found to comply with the limits for a Class A digital device, pursuant to part 15 of the FCC Rules. These limits are designed to provide reasonable protection against harmful interference when the equipment is operated in a commercial environment. This equipment generates, uses, and can radiate radio frequency energy and, if not installed and used in accordance with the instruction manual, may cause harmful interference to radio communications. Operation of this equipment in a residential area is likely to cause harmful interference in which case the user will be required to correct the interference at his own expense.

FCC Interference Statement for Class B EVM devices

This equipment has been tested and found to comply with the limits for a Class B digital device, pursuant to part 15 of the FCC Rules. These limits are designed to provide reasonable protection against harmful interference in a residential installation. This equipment generates, uses and can radiate radio frequency energy and, if not installed and used in accordance with the instructions, may cause harmful interference to radio communications. However, there is no guarantee that interference will not occur in a particular installation. If this equipment does cause harmful interference to radio or television reception, which can be determined by turning the equipment off and on, the user is encouraged to try to correct the interference by one or more of the following measures:

- Reorient or relocate the receiving antenna.
- Increase the separation between the equipment and receiver.
- Connect the equipment into an outlet on a circuit different from that to which the receiver is connected.
- Consult the dealer or an experienced radio/TV technician for help.

For EVMs annotated as IC – INDUSTRY CANADA Compliant

This Class A or B digital apparatus complies with Canadian ICES-003.

Changes or modifications not expressly approved by the party responsible for compliance could void the user's authority to operate the equipment.

Concerning EVMs including radio transmitters

This device complies with Industry Canada licence-exempt RSS standard(s). Operation is subject to the following two conditions: (1) this device may not cause interference, and (2) this device must accept any interference, including interference that may cause undesired operation of the device.

Concerning EVMs including detachable antennas

Under Industry Canada regulations, this radio transmitter may only operate using an antenna of a type and maximum (or lesser) gain approved for the transmitter by Industry Canada. To reduce potential radio interference to other users, the antenna type and its gain should be so chosen that the equivalent isotropically radiated power (e.i.r.p.) is not more than that necessary for successful communication.

This radio transmitter has been approved by Industry Canada to operate with the antenna types listed in the user guide with the maximum permissible gain and required antenna impedance for each antenna type indicated. Antenna types not included in this list, having a gain greater than the maximum gain indicated for that type, are strictly prohibited for use with this device.

Cet appareil numérique de la classe A ou B est conforme à la norme NMB-003 du Canada.

Les changements ou les modifications pas expressément approuvés par la partie responsable de la conformité ont pu vider l'autorité de l'utilisateur pour actionner l'équipement.

Concernant les EVMs avec appareils radio

Le présent appareil est conforme aux CNR d'Industrie Canada applicables aux appareils radio exempts de licence. L'exploitation est autorisée aux deux conditions suivantes : (1) l'appareil ne doit pas produire de brouillage, et (2) l'utilisateur de l'appareil doit accepter tout brouillage radioélectrique subi, même si le brouillage est susceptible d'en compromettre le fonctionnement.

Concernant les EVMs avec antennes détachables

Conformément à la réglementation d'Industrie Canada, le présent émetteur radio peut fonctionner avec une antenne d'un type et d'un gain maximal (ou inférieur) approuvé pour l'émetteur par Industrie Canada. Dans le but de réduire les risques de brouillage radioélectrique à l'intention des autres utilisateurs, il faut choisir le type d'antenne et son gain de sorte que la puissance isotrope rayonnée équivalente (p.i.r.e.) ne dépasse pas l'intensité nécessaire à l'établissement d'une communication satisfaisante.

Le présent émetteur radio a été approuvé par Industrie Canada pour fonctionner avec les types d'antenne énumérés dans le manuel d'usage et ayant un gain admissible maximal et l'impédance requise pour chaque type d'antenne. Les types d'antenne non inclus dans cette liste, ou dont le gain est supérieur au gain maximal indiqué, sont strictement interdits pour l'exploitation de l'émetteur.

【Important Notice for Users of this Product in Japan】

This development kit is NOT certified as Confirming to Technical Regulations of Radio Law of Japan

If you use this product in Japan, you are required by Radio Law of Japan to follow the instructions below with respect to this product:

1. Use this product in a shielded room or any other test facility as defined in the notification #173 issued by Ministry of Internal Affairs and Communications on March 28, 2006, based on Sub-section 1.1 of Article 6 of the Ministry's Rule for Enforcement of Radio Law of Japan,
2. Use this product only after you obtained the license of Test Radio Station as provided in Radio Law of Japan with respect to this product, or
3. Use of this product only after you obtained the Technical Regulations Conformity Certification as provided in Radio Law of Japan with respect to this product. Also, please do not transfer this product, unless you give the same notice above to the transferee. Please note that if you could not follow the instructions above, you will be subject to penalties of Radio Law of Japan.

Texas Instruments Japan Limited
(address) 24-1, Nishi-Shinjuku 6 chome, Shinjuku-ku, Tokyo, Japan

http://www.tij.co.jp

【ご使用にあたっての注】

本開発キットは技術基準適合証明を受けておりません。

本製品のご使用に際しては、電波法遵守のため、以下のいずれかの措置を取っていただく必要がありますのでご注意ください。

1. 電波法施行規則第6条第1項第1号に基づく平成18年3月28日総務省告示第173号で定められた電波暗室等の試験設備でご使用いただく。
2. 実験局の免許を取得後ご使用いただく。
3. 技術基準適合証明を取得後ご使用いただく。

なお、本製品は、上記の「ご使用にあたっての注意」を譲渡先、移転先に通知しない限り、譲渡、移転できないものとします。

上記を遵守頂けない場合は、電波法の罰則が適用される可能性があることをご留意ください。

日本テキサス· インスツルメンツ株式会社
東京都新宿区西新宿６丁目２４番１号
西新宿三井ビル
http://www.tij.co.jp

EVALUATION BOARD/KIT/MODULE (EVM)
WARNINGS, RESTRICTIONS AND DISCLAIMERS

For Feasibility Evaluation Only, in Laboratory/Development Environments. Unless otherwise indicated, this EVM is not a finished electrical equipment and not intended for consumer use. It is intended solely for use for preliminary feasibility evaluation in laboratory/development environments by technically qualified electronics experts who are familiar with the dangers and application risks associated with handling electrical mechanical components, systems and subsystems. It should not be used as all or part of a finished end product.

Your Sole Responsibility and Risk. You acknowledge, represent and agree that:

1. You have unique knowledge concerning Federal, State and local regulatory requirements (including but not limited to Food and Drug Administration regulations, if applicable) which relate to your products and which relate to your use (and/or that of your employees, affiliates, contractors or designees) of the EVM for evaluation, testing and other purposes.
2. You have full and exclusive responsibility to assure the safety and compliance of your products with all such laws and other applicable regulatory requirements, and also to assure the safety of any activities to be conducted by you and/or your employees, affiliates, contractors or designees, using the EVM. Further, you are responsible to assure that any interfaces (electronic and/or mechanical) between the EVM and any human body are designed with suitable isolation and means to safely limit accessible leakage currents to minimize the risk of electrical shock hazard.
3. You will employ reasonable safeguards to ensure that your use of the EVM will not result in any property damage, injury or death, even if the EVM should fail to perform as described or expected.
4. You will take care of proper disposal and recycling of the EVM's electronic components and packing materials.

Certain Instructions. It is important to operate this EVM within TI's recommended specifications and environmental considerations per the user guidelines. Exceeding the specified EVM ratings (including but not limited to input and output voltage, current, power, and environmental ranges) may cause property damage, personal injury or death. If there are questions concerning these ratings please contact a TI field representative prior to connecting interface electronics including input power and intended loads. Any loads applied outside of the specified output range may result in unintended and/or inaccurate operation and/or possible permanent damage to the EVM and/or interface electronics. Please consult the EVM User's Guide prior to connecting any load to the EVM output. If there is uncertainty as to the load specification, please contact a TI field representative. During normal operation, some circuit components may have case temperatures greater than 60°C as long as the input and output are maintained at a normal ambient operating temperature. These components include but are not limited to linear regulators, switching transistors, pass transistors, and current sense resistors which can be identified using the EVM schematic located in the EVM User's Guide. When placing measurement probes near these devices during normal operation, please be aware that these devices may be very warm to the touch. As with all electronic evaluation tools, only qualified personnel knowledgeable in electronic measurement and diagnostics normally found in development environments should use these EVMs.

Agreement to Defend, Indemnify and Hold Harmless. You agree to defend, indemnify and hold TI, its licensors and their representatives harmless from and against any and all claims, damages, losses, expenses, costs and liabilities (collectively, "Claims") arising out of or in connection with any use of the EVM that is not in accordance with the terms of the agreement. This obligation shall apply whether Claims arise under law of tort or contract or any other legal theory, and even if the EVM fails to perform as described or expected.

Safety-Critical or Life-Critical Applications. If you intend to evaluate the components for possible use in safety critical applications (such as life support) where a failure of the TI product would reasonably be expected to cause severe personal injury or death, such as devices which are classified as FDA Class III or similar classification, then you must specifically notify TI of such intent and enter into a separate Assurance and Indemnity Agreement.

Mailing Address: Texas Instruments, Post Office Box 655303, Dallas, Texas 75265
Copyright © 2013, Texas Instruments Incorporated

IMPORTANT NOTICE

Texas Instruments Incorporated and its subsidiaries (TI) reserve the right to make corrections, enhancements, improvements and other changes to its semiconductor products and services per JESD46, latest issue, and to discontinue any product or service per JESD48, latest issue. Buyers should obtain the latest relevant information before placing orders and should verify that such information is current and complete. All semiconductor products (also referred to herein as “components”) are sold subject to TI’s terms and conditions of sale supplied at the time of order acknowledgment.

TI warrants performance of its components to the specifications applicable at the time of sale, in accordance with the warranty in TI’s terms and conditions of sale of semiconductor products. Testing and other quality control techniques are used to the extent TI deems necessary to support this warranty. Except where mandated by applicable law, testing of all parameters of each component is not necessarily performed.

TI assumes no liability for applications assistance or the design of Buyers’ products. Buyers are responsible for their products and applications using TI components. To minimize the risks associated with Buyers’ products and applications, Buyers should provide adequate design and operating safeguards.

TI does not warrant or represent that any license, either express or implied, is granted under any patent right, copyright, mask work right, or other intellectual property right relating to any combination, machine, or process in which TI components or services are used. Information published by TI regarding third-party products or services does not constitute a license to use such products or services or a warranty or endorsement thereof. Use of such information may require a license from a third party under the patents or other intellectual property of the third party, or a license from TI under the patents or other intellectual property of TI.

Reproduction of significant portions of TI information in TI data books or data sheets is permissible only if reproduction is without alteration and is accompanied by all associated warranties, conditions, limitations, and notices. TI is not responsible or liable for such altered documentation. Information of third parties may be subject to additional restrictions.

Resale of TI components or services with statements different from or beyond the parameters stated by TI for that component or service voids all express and any implied warranties for the associated TI component or service and is an unfair and deceptive business practice. TI is not responsible or liable for any such statements.

Buyer acknowledges and agrees that it is solely responsible for compliance with all legal, regulatory and safety-related requirements concerning its products, and any use of TI components in its applications, notwithstanding any applications-related information or support that may be provided by TI. Buyer represents and agrees that it has all the necessary expertise to create and implement safeguards which anticipate dangerous consequences of failures, monitor failures and their consequences, lessen the likelihood of failures that might cause harm and take appropriate remedial actions. Buyer will fully indemnify TI and its representatives against any damages arising out of the use of any TI components in safety-critical applications.

In some cases, TI components may be promoted specifically to facilitate safety-related applications. With such components, TI’s goal is to help enable customers to design and create their own end-product solutions that meet applicable functional safety standards and requirements. Nonetheless, such components are subject to these terms.

No TI components are authorized for use in FDA Class III (or similar life-critical medical equipment) unless authorized officers of the parties have executed a special agreement specifically governing such use.

Only those TI components which TI has specifically designated as military grade or “enhanced plastic” are designed and intended for use in military/aerospace applications or environments. Buyer acknowledges and agrees that any military or aerospace use of TI components which have ***not*** been so designated is solely at the Buyer's risk, and that Buyer is solely responsible for compliance with all legal and regulatory requirements in connection with such use.

TI has specifically designated certain components as meeting ISO/TS16949 requirements, mainly for automotive use. In any case of use of non-designated products, TI will not be responsible for any failure to meet ISO/TS16949.

Products		**Applications**	
Audio	www.ti.com/audio	Automotive and Transportation	www.ti.com/automotive
Amplifiers	amplifier.ti.com	Communications and Telecom	www.ti.com/communications
Data Converters	dataconverter.ti.com	Computers and Peripherals	www.ti.com/computers
DLP® Products	www.dlp.com	Consumer Electronics	www.ti.com/consumer-apps
DSP	dsp.ti.com	Energy and Lighting	www.ti.com/energy
Clocks and Timers	www.ti.com/clocks	Industrial	www.ti.com/industrial
Interface	interface.ti.com	Medical	www.ti.com/medical
Logic	logic.ti.com	Security	www.ti.com/security
Power Mgmt	power.ti.com	Space, Avionics and Defense	www.ti.com/space-avionics-defense
Microcontrollers	microcontroller.ti.com	Video and Imaging	www.ti.com/video
RFID	www.ti-rfid.com		
OMAP Applications Processors	www.ti.com/omap	**TI E2E Community**	e2e.ti.com
Wireless Connectivity	www.ti.com/wirelessconnectivity		

Mailing Address: Texas Instruments, Post Office Box 655303, Dallas, Texas 75265
Copyright © 2013, Texas Instruments Incorporated